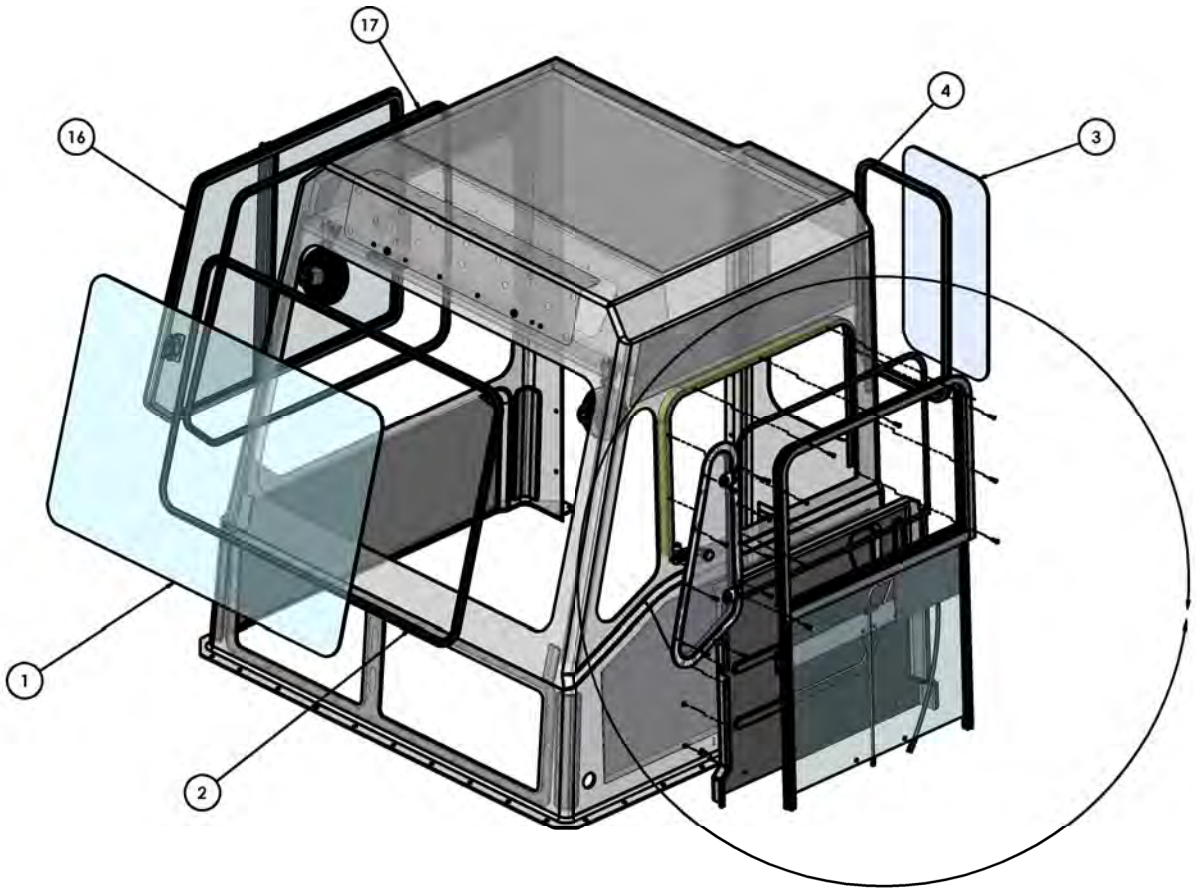

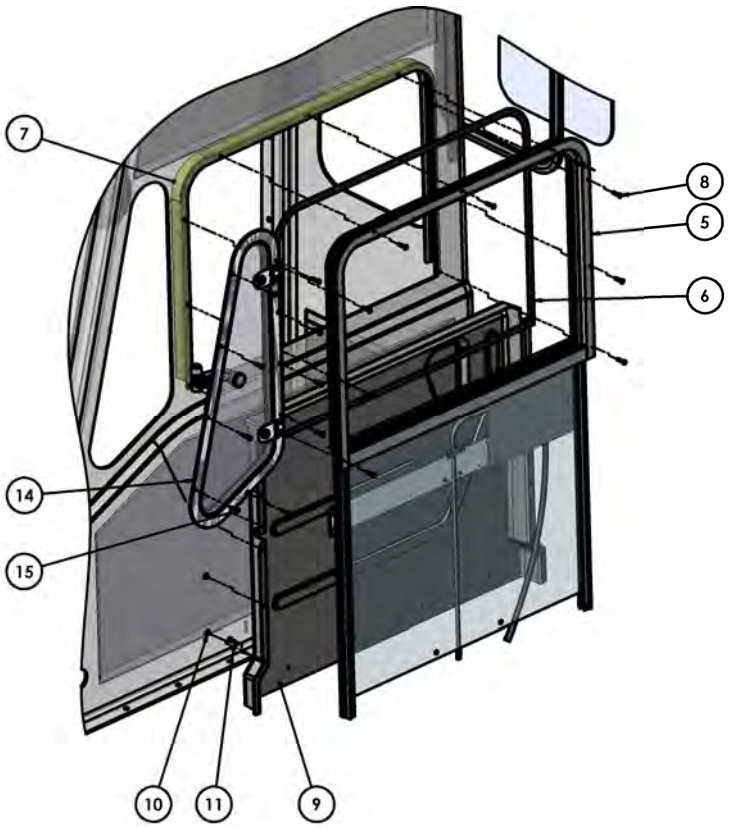

DIMENSIONS ARE IN INCHES		NAME	DATE
TOLERANCES: DECIMAL X.X ±0.06 X.XX ±0.03 X.XXX ±0.005 X.XXXX ±0.0050 ANGULAR ±0° FRACTIONAL ±1/32"	DRAWN	MAL	10/17/2016
	CHECKED		
	APPROVED		
	DO NOT SCALE DRAWING		
INTERPRET GEOMETRIC TOLERANCING PER: ASME Y14.5M-1994	THE SUBJECT MATTER SHOWN AND DESCRIBED HEREIN IS THE PROPERTY OF TICO MANUFACTURING AND MAY NOT BE COPIED, REPRODUCED OR DISCLOSED IN WHOLE OR IN PART WITHOUT A PROPRIETARY PROVISIONS AND IS TO BE HELD IN STRICT CONFIDENCE BY YOU AND YOUR EMPLOYEES. ALL DRAWINGS, DESIGNS, TRADE MARKS, TRADE NAMES, AND COPYRIGHTS DISCLOSED HEREIN ARE ASSIGNED TO TICO TERMINAL SERVICES, INC.		
MATERIAL			
FINISH			
TREATMENT			

TICO MANUFACTURING
66 CYPRESS RIDGE DR.
RIDGELAND, SC 29936
(843) 717-2226

TITLE: WINDOWS-2017-III CAB

SIZE	DWG. NO.	REV
D	722243-A1	
SCALE: 1:16	WEIGHT:	SHEET 1 OF 1

D 722243-A1 REV

TICO PRO-SPOTTER

WINDOWS, 2017-III CAB — 722243

ITEM	PART #	QTY/M	DESCRIPTION	
	722243-A1	REF	WINDOWS, 2017-III CAB	
1	121369	1	GLASS-WINDSHIELD, FRT. 2017-III CAB	
2	90521-9	1	SEAL-RUBBER, FRT WINDSHIELD, 2017-III CAB	
NOT SHOWN	90522	14.7 FT	STRIP, LACE, LOCK, RUBBER	
3	920389	1	WINDOW, REAR CAB, LAMINATED, 2017-III CAB	
4	90521-1	1	WEATHERSTRIPPING, SEAL	
NOT SHOWN	90522	7.3 FT	STRIP, LACE, LOCK, RUBBER	
5	920088	1	WINDOW-LH SIDE POWER WINDOW	
6	121368	1	GASKET, 2017 CAB POWER WINDOW	
7	121366	1	ASSEMBLY, 2017 CAB UPPER POWER WINDOW FRAME	
8	800439	9	SCREW, BUTTON HD SOCKET CAP W/FLG., #10-32 X 1" LG., SS	
NOT SHOWN	80232	2	WASHER, FLAT, SAE, #10, SS	
NOT SHOWN	800424	2	NUT, HEX, NYLOCK, #10-32, SS	
NOT SHOWN	920426	2	DRAIN FITTING, DUCK BILL, EPDM, 0.63 DIA X 1.08" LG	
9	122011	1	PANEL-POWER WINDOW, 2017-III CAB	
10	800440	8	SCREW, PHILLIPS OVAL HD #10 X 1/2" LG.	
11	800441	6	SCREW, PHILLIPS TRUSS HD, #10-32 X 3/4 LG., SS	
12	91903	4	NUT, "S" STYLE, 10-32, ZINC	
13	91903	4	NUT, "S" STYLE, 10-32, ZINC	
NOT SHOWN	620805	1	HARNESS- 2017 CAB, POWER WINDOW	
NOT SHOWN	910366	1	SWITCH- ROCKER, POWER WINDOW CONTROL	
14	920385	1	LH SIDE AUX. VENT WINDOW, 2017-II	
NOT SHOWN	122359	1	PLATE, BACKING, LH SIDE AUX. VENT WINDOW, 2017-II	
NOT SHOWN	122358	1	GASKET, LH SIDE AUX. VENT WINDOW, 2017-II	
15	800439	9	SCREW, BUTTON HD SOCKET CAP W/FLG., #10-32 X 1" LG., SS	
NOT SHOWN	80232	9	WASHER, FLAT, SAE, #10, SS	
NOT SHOWN	800424	9	NUT, HEX, NYLOCK, #10-32, SS	
16	920447	1	WINDOW-RH SIDE SLIDE/EGRESS, 2017-III CAB	
17	90521-8	1	SEAL-RUBBER, RH SIDE EGRESS WINDOW, 2017-III CAB	
NOT SHOWN	90522	12.7 FT	STRIP, LACE, LOCK, RUBBER	

REV	DATE	BY		SHEET
A	10/26/2018	MAL		1 OF 1

TICO MANUFACTURING - RIDGELAND, SC 29936