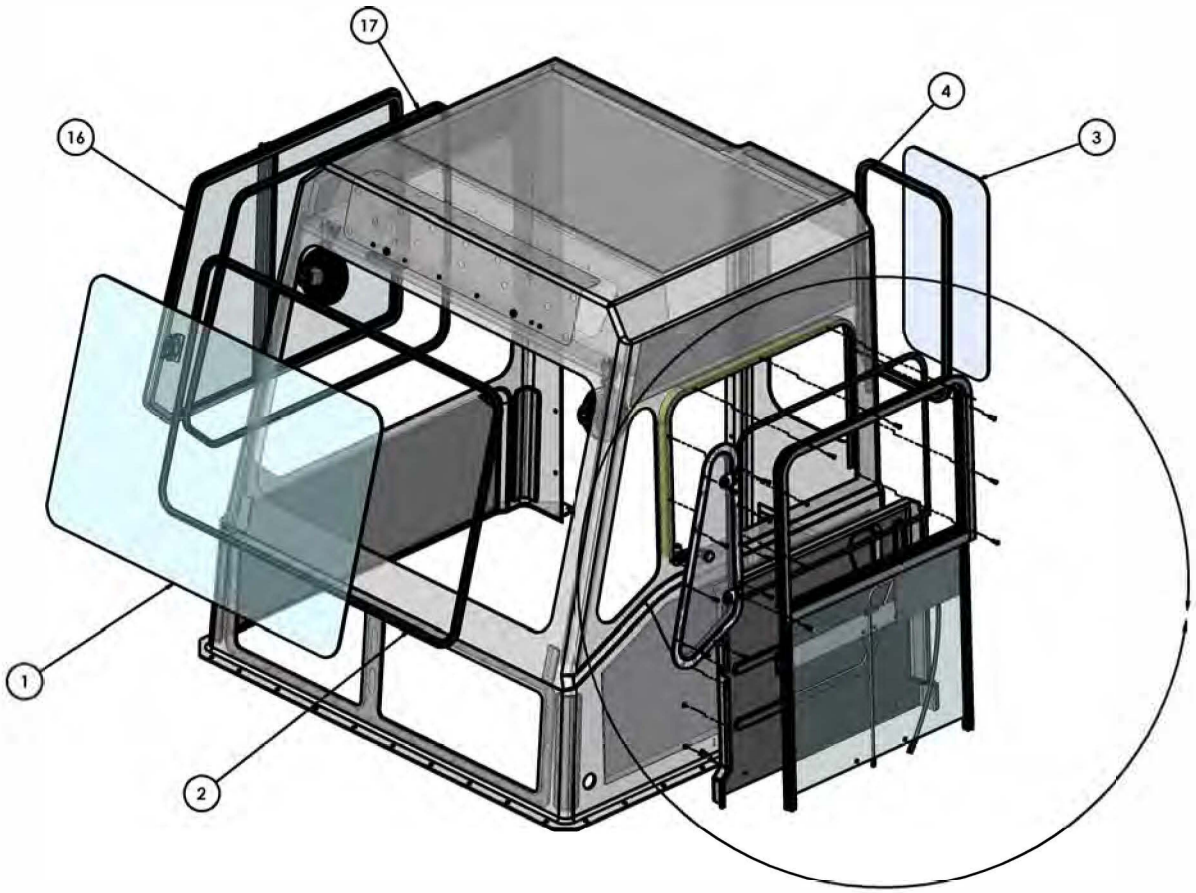

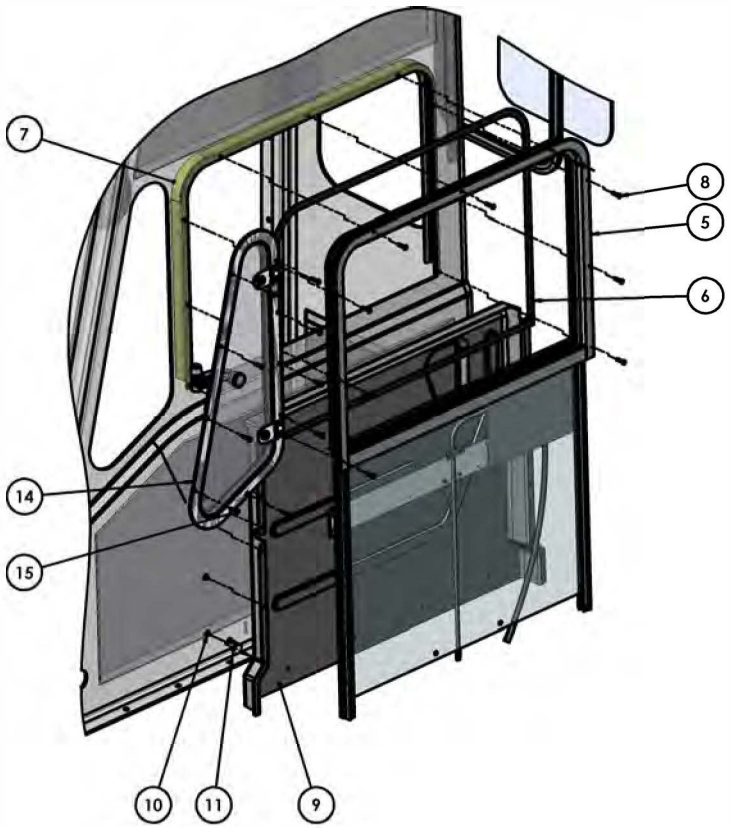

DIMENSIONS ARE IN INCHES		NAME	DATE
TOLERANCES:	DRAWN	MJAL	10/17/2018
DECIMAL: X.X ±0.06, X.XX ±0.03, X.XXX ±0.005	CHECKED		
ANGULAR: ±1/2°	APPROVED		
FRACTIONAL: ±1/32"	DO NOT SCALE DRAWING		
INTERPRET GEOMETRIC TOLERANCING PER: ASME Y14.5M-1994	THE SUBJECT MATTER SHOWN AND DESCRIBED IN THIS DRAWING AND ANY COPIES MADE FROM IT ARE THE PROPERTY OF TICO MANUFACTURING & REPAIR LLC PROPERTY AND IS TO BE HELD IN STRICT CONFIDENCE BY YOU. THE DESIGN, PATENTS PENDING DESIGN, TRADE MARKS, TRADE NAMES AND CONFIDENTIAL DISCLOSED ARE REVEALED TO TICO TERMINAL SERVICES, INC.		
MATERIAL			
FINISH			
TOLERANCE			

TICO MANUFACTURING
66 CYPRESS RIDGE DR.
RIDGELAND, SC 29936
(843) 717-2226

TITLE: WINDOWS-2017-III CAB

SIZE	DWG. NO.	REV
D	722242-A1	

SCALE: 1:16 WEIGHT: SHEET 1 OF 1

TICO PRO-SPOTTER

WINDOWS, 2017-III CAB — 722242

ITEM	PART #	QTY/M	DESCRIPTION	
	722242-A1	REF	WINDOWS, 2017-III CAB	
1	121369	1	GLASS-WINDSHIELD, FRT. 2017-III CAB	
2	90521-9	1	SEAL-RUBBER, FRT WINDSHIELD, 2017-III CAB	
NOT SHOWN	90522	14.7 FT	STRIP, LACE, LOCK, RUBBER	
3	920389	1	WINDOW, REAR CAB, LAMINATED, 2017-III CAB	
4	90521-1	1	WEATHERSTRIPPING, SEAL	
NOT SHOWN	90522	7.3 FT	STRIP, LACE, LOCK, RUBBER	
5	920088	1	WINDOW-LH SIDE POWER WINDOW	
6	121368	1	GASKET, 2017 CAB POWER WINDOW	
7	121366	1	ASSEMBLY, 2017 CAB UPPER POWER WINDOW FRAME	
8	800439	9	SCREW, BUTTON HD SOCKET CAP W/FLG., #10-32 X 1" LG., SS	
NOT SHOWN	80232	2	WASHER, FLAT, SAE, #10, SS	
NOT SHOWN	800424	2	NUT, HEX, NYLOCK, #10-32, SS	
NOT SHOWN	920426	2	DRAIN FITTING, DUCK BILL, EPDM, 0.63 DIA X 1.08" LG	
9	122011	1	PANEL-POWER WINDOW, 2017-III CAB	
10	800440	8	SCREW, PHILLIPS OVAL HD #10 X 1/2" LG.	
11	800441	6	SCREW, PHILLIPS TRUSS HD, #10-32 X 3/4 LG., SS	
12	91903	4	NUT, "S" STYLE, 10-32, ZINC	
13	91903	4	NUT, "S" STYLE, 10-32, ZINC	
NOT SHOWN	620805	1	HARNESS- 2017 CAB, POWER WINDOW	
NOT SHOWN	910366	1	SWITCH- ROCKER, POWER WINDOW CONTROL	
14	122235	1	LH SIDE AUX. VENT WINDOW, 2017-II	
NOT SHOWN	920377	1	GASKET, LH SIDE AUX. VENT WINDOW, 2017-II	
15	800439	9	SCREW, BUTTON HD SOCKET CAP W/FLG., #10-32 X 1" LG., SS	
NOT SHOWN	90522	5.7 FT	STRIP, LACE, LOCK, RUBBER	
16	920447	1	WINDOW-RH SIDE SLIDE/EGRESS, 2017-III CAB	
17	90521-8	1	SEAL-RUBBER, RH SIDE EGRESS WINDOW, 2017-III CAB	
NOT SHOWN	90522	12.7 FT	STRIP, LACE, LOCK, RUBBER	
REV	**DATE**	**BY**		**SHEET**
A	5/16/2019	MAL		1 OF 1

TICO MANUFACTURING - RIDGELAND, SC 29936