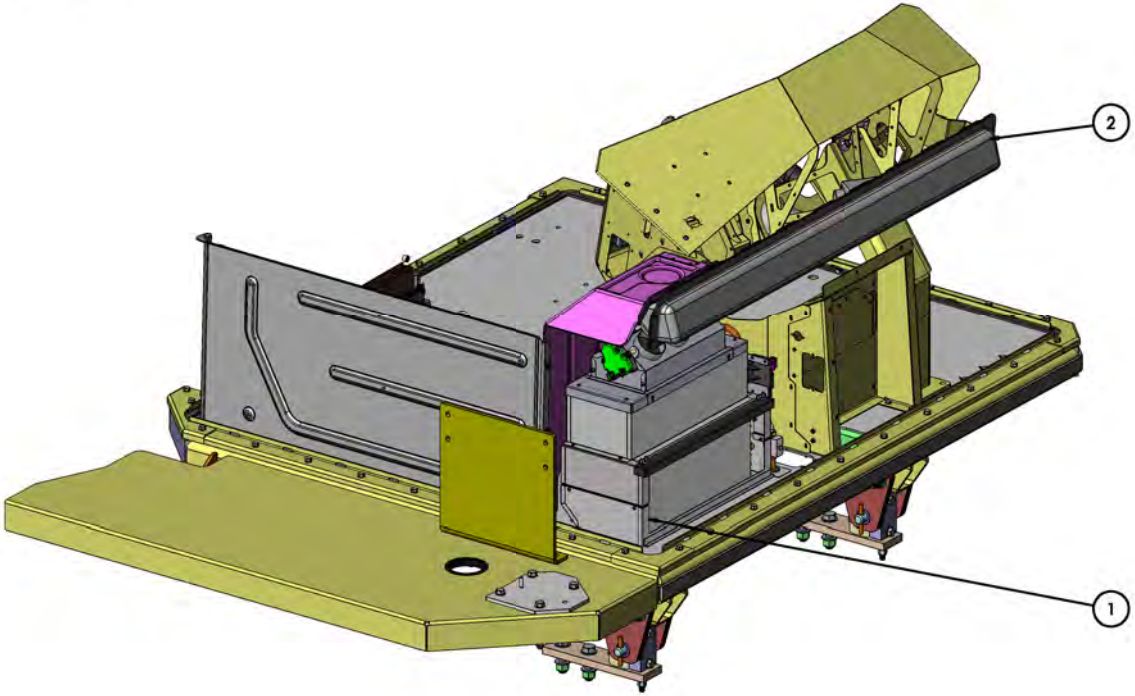

DIMENSIONS ARE IN INCHES TOLERANCES: DECIMAL X.X ± 0.06 X.XX ± 0.03 X.XXX ± 0.005 ANGULAR ± 0.5° FRACTIONAL ± 1/32"		NAME	DATE
	DRAWN	MAL	10/16/2018
	CHECKED		
	APPROVED		
	DO NOT SCALE DRAWING		
INTERPRET GEOMETRIC TOLERANCING PER: ASME Y14.5M-1994	THE SUBJECT MATTER SHOWN AND DESCRIBED HEREIN IS THE PROPERTY OF TICO MANUFACTURING AND MUST BE KEPT CONFIDENTIAL. NO PART OF THIS DOCUMENT MAY BE REPRODUCED OR DISCLOSED IN WHOLE OR IN PART WITHOUT PRIOR WRITTEN PERMISSION. THE INFORMATION CONTAINED IN THIS DRAWING IS THE SOLE PROPERTY OF TICO MANUFACTURING. ANY REPRODUCTION IN PART OR AS A WHOLE WITHOUT THE WRITTEN PERMISSION OF TICO MANUFACTURING IS PROHIBITED.		
FINISH N/A			
TEXT SEE NOTE			
TREATMENT N/A			

TICO MANUFACTURING
66 CYPRESS RIDGE DR
RIDGELAND, SC 29936
(843) 717-2226

TITLE: HEATER

SIZE	DWG. NO.	REV
D	722140-D1	

SCALE: 1:16 | WEIGHT: 1868.83 | SHEET 1 OF 1

722140-D1 | D

TICO PRO-SPOTTER

HEATER, 2017-III CAB ELEC CONTROL, RED DOT, B6.7/SILICONE HOSE — 722140

ITEM	PART #	QTY/M	DESCRIPTION	
	722140-D1	REF	HEATER, 2017-III CAB ELEC CONTROL, RED DOT, B6.7/SILICONE HOSE	
1	920445	1	MODULE, HEATER ACTUATOR, RED DOT, UNSEALED	
NOT SHOWN	85090	4	WASHER, 5/16" HRDN	
NOT SHOWN	85024	4	NUT, 5/16-18 NYLOK GRD 8	
NOT SHOWN	920422	REF	FILTER, THERMA-TECH HEATER/AC PERMATRON	
NOT SHOWN	920423	REF	PLENUM ASS'Y, ELEC CONTROLS	
NOT SHOWN				
NOT SHOWN	910453	5 IN	HOSE, 3" FLEX	
NOT SHOWN	42299	2	CLAMP, WORMGEAR, LINER, 3" DIA HOSE	
NOT SHOWN	910453	35 IN	HOSE, 3" FLEX	
NOT SHOWN	42299	2	CLAMP, WORMGEAR, LINER, 3" DIA HOSE	
NOT SHOWN	910453	12 IN	HOSE, 3" FLEX	
NOT SHOWN	42299	2	CLAMP, WORMGEAR, LINER, 3" DIA HOSE	
NOT SHOWN	90857	1	HEATER DUCT ASSY 3" TO 2"	
NOT SHOWN	910452	60 IN	HOSE, 2" FLEX	
NOT SHOWN	42157	2	CLAMP, WORMGEAR, LINER, 2" DIA HOSE	
NOT SHOWN	910452	48 IN	HOSE, 2" FLEX	
NOT SHOWN	42157	2	CLAMP, WORMGEAR, LINER, 2" DIA HOSE	
NOT SHOWN	920282	4	VENT, 2" BALL LOUVER DUAL AXIS	
2	121372	1	MANIFOLD, 2017 CAB DEFROSTER DUCT	
NOT SHOWN	81534	4	SCREW, HEX HD SOCKET CAP 1/4-20 X 1" LG, GR 5, ZINC	
NOT SHOWN	85111	8	WASHER, NARROW, SOFT, 1/4", ZINC	
NOT SHOWN	85001	4	NUT, HEX, NYLOCK 1/4-20, GR 5, ZINC	
NOT SHOWN	41178	80 IN	HOSE, HEATER, SILICONE, 5/8" ID	
NOT SHOWN	41178	80 IN	HOSE, HEATER, SILICONE, 5/8" ID	
NOT SHOWN	42150	4	CLAMP, WORMGEAR HOSE #08 LINER 7/16-1	
NOT SHOWN	81534	2	SCREW, HEX HD SOCKET CAP 1/4-20 X 1" LG, GR 5, ZINC	
NOT SHOWN	85111	4	WASHER, NARROW, SOFT, 1/4", ZINC	
NOT SHOWN	85001	2	NUT, HEX, NYLOCK 1/4-20, GR 5, ZINC	
3	920446	1	PANEL, HEATER CONTROL, RED DOT, UNSEALED	
NOT SHOWN	800410	6	SCREW, BUTTON HD SOCKET CAP 10-32 X 1/2, SS	
NOT SHOWN	620470	1	WIRE HARNESS, AC THERMOSTAT BYPASS	
NOT SHOWN	12067	1	BRACKET - STANDOFF (HEATER LINES)	

REV	DATE	BY		SHEET
D	10/16/2018	MAL		1 OF 2

TICO MANUFACTURING - RIDGELAND, SC 29936

TICO PRO-SPOTTER

HEATER, 2017-III CAB ELEC CONTROL, RED DOT, B6.7/SILICONE HOSE — **722140**

ITEM	PART #	QTY/M	DESCRIPTION	
NOT SHOWN	910452	13 IN	HOSE, 2" FLEX	
NOT SHOWN	910452	26 IN	HOSE, 2" FLEX	
NOT SHOWN	42157	4	CLAMP, WORMGEAR, LINER, 2" DIA HOSE	

REV	DATE	BY		SHEET
D	10/16/2018	MAL		2 OF 2

TICO MANUFACTURING - RIDGELAND, SC 29936