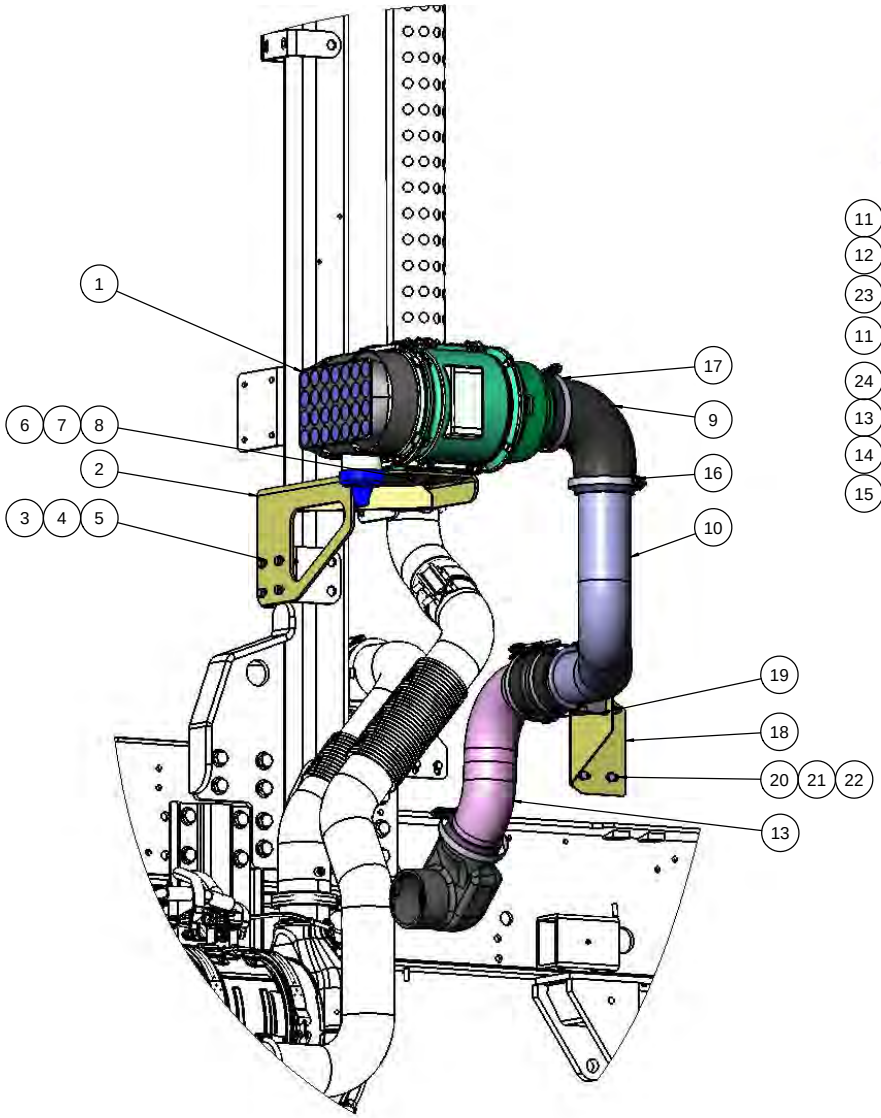

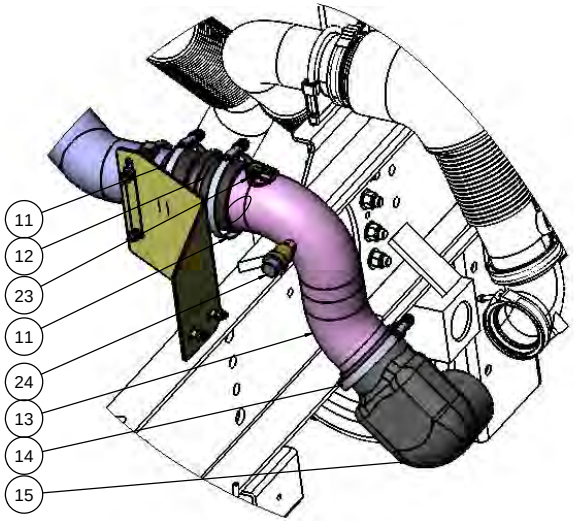

DIMENSIONS ARE IN INCHES TOLERANCES: DECIMAL X.X ± 0.06 X.XX ± 0.03 X.XXX ± 0.005 ANGULAR: ± 0.5° FRACTIONAL ± 1/32"		NAME	DATE
	DRAWN	MAL	1/5/2018
	CHECKED		
	APPROVED		
	DO NOT SCALE DRAWING		
MATERIAL N/A	THE SUBJECT MATTER SHOWN AND DESCRIBED HEREIN AND IN ANY AND ANY OTHER INFORMATION ADVANCED IN CONNECTION THEREWITH IS PROPRIETARY AND IS TO BE RECEIVED IN THE STRICTEST CONFIDENCE BY YOU. ALL RIGHTS TO ANY INVENTIONS, DESIGNS, TRADE MARKS, TRADE NAMES AND COPYRIGHTS DISCLOSED ARE RETAINED TO TICO TERMINAL SERVICES INC.		
FINISH SEE NOTE			
THICKNESS N/A			

TICO MANUFACTURING
66 CYPRESS RIDGE DR.
RIDGELAND, SC 29936
(843) 717-2226

TITLE: AIR INTAKE

SIZE	DWG. NO.	REV
D	721832-B1	

SCALE: 1:32 | WEIGHT: 3320.25 | SHEET 1 OF 1

REV	
D	721832-B1

TICO PRO-SPOTTER

AIR INTAKE SYSTEM, B6.7-DONALDSON POWERCORE W/PRECLEANER — 721832

ITEM	PART #	QTY/M	DESCRIPTION
	721832-B1	REF	AIR INTAKE SYSTEM, B6.7-DONALDSON POWERCORE W/PRECLEANER
1	62337	1	FILTER, DONALDSON POWERCORE AIR INTAKE
2	122493	1	BRACKET, AIR CLEANER, DONALDSON, B6.7, HORIZONTAL REARWARD
3	82394	4	BOLT, HEX, 3/8-16 X 1-1/2 LG *(BRACKET TO CAB BAR)*
4	85091	8	WASHER, FLAT, 3/8 *(BRACKET TO CAB BAR)*
5	85025	4	LOCKNUT, NYLOCK, 3/8-16 *(BRACKET TO CAB BAR)*
6	82372	4	BOLT, HEX, 3/8-16 X 1 LG *(FILTER TO BRACKET)*
7	85025	4	WASHER, FLAT, 3/8 *(FILTER TO BRACKET)*
8	85135	4	LOCKWASHER, HELICAL, 3/8 *(FILTER TO BRACKET)*
9	920312	1	ELBOW, 90° RUBBER 5" ID TO 4" ID
10	620914	1	TUBE, INTAKE, HUMP TO FILTER, B6.7, REARWARD FILTER
11	40190	2	CLAMP INTAKE ISB 5"
12	40170-16	1	HUMP HOSE, 4"
13	62064	1	TUBE, AIR INTAKE, COMP TO HUMP HOSE, W/ SENSOR PLUG
14	40190	2	CLAMP INTAKE ISB 5"
15	62276	1	ELBOW 90 COBRA 4"
16	40190	1	CLAMP INTAKE ISB 5"
17	40190-1	1	CLAMP INTAKE QSB/ISB 6"
18	12791	1	BRACKET, HUMP HOSE AIR INTAKE MOUNT
19	420404	1	CLAMP, 4" SADDLE
20	82383	2	BOLT, HEX, 3/8-16 X 1-1/4 LG
21	85091	4	WASHER, FLAT, 3/8
22	85025	2	LOCKNUT, NYLOCK, 3/8-16
23	91238	1	SENSOR - TEMP/PRESS - AIR INLET
NOT SHOWN	80367	1	BOLT, HEX, 4MM X 20 MM LG, SS
24	40627	1	AIR FILTER MINDERGAGE

REV	DATE	BY		SHEET
B	1/5/2018	MAL		1 OF 1

TICO MANUFACTURING - RIDGELAND, SC 29936