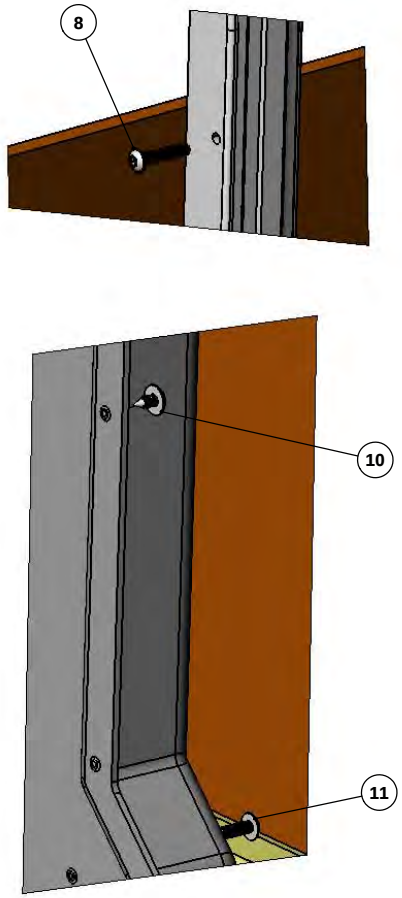

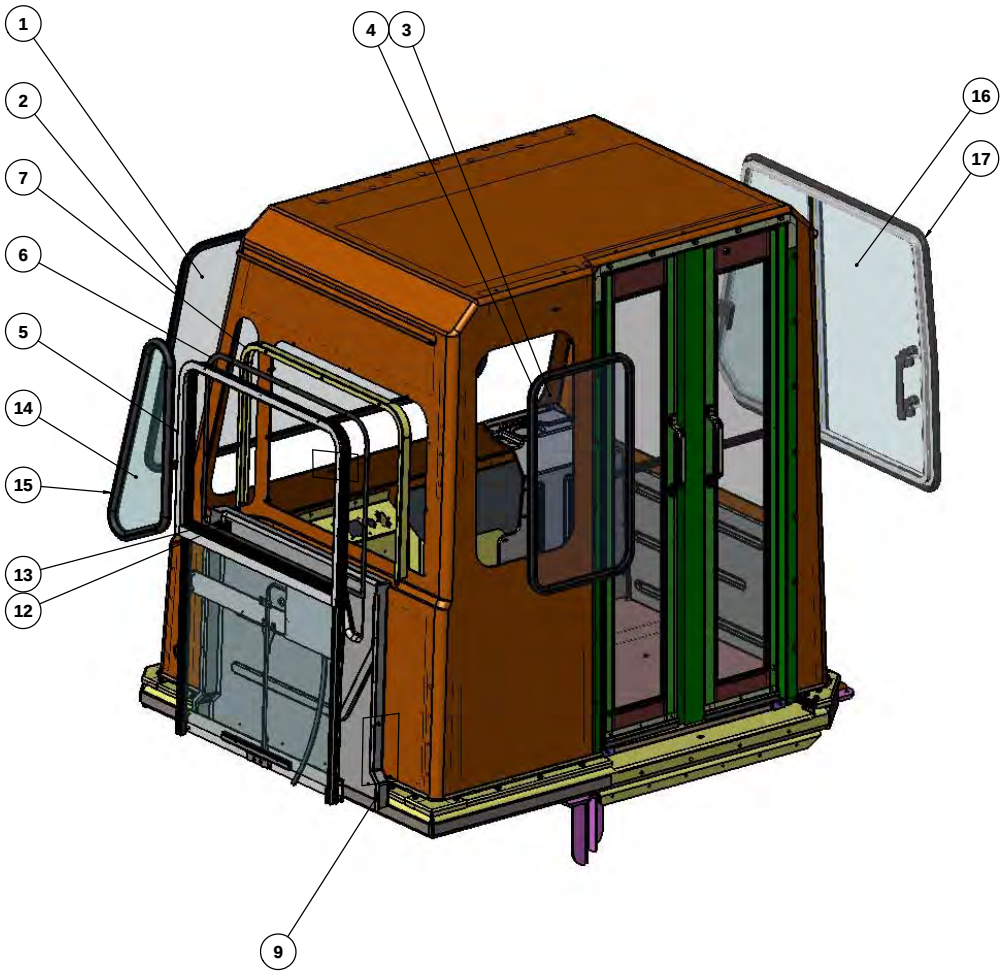

DIMENSIONS ARE IN INCHES
TOLERANCES:
DECIMAL:
X.X ± 0.06
X.XX ± 0.03
X.XXX ± 0.005
ANGULAR: ± 0.5°
FRACTIONAL ± 1/32"

MATERIAL
N/A

FINISH
SEE NOTE

THICKNESS
N/A

	NAME	DATE
DRAWN	MAL	11/07/2017
CHECKED		
APPROVED		

DO NOT SCALE DRAWING

THE SUBJECT MATTER SHOWN AND DESCRIBED IN THE DRAWING AND ANY OTHER INFORMATION ADVANCED IN CONNECTION THEREWITH IS PROPRIETARY PROPERTY AND IS TO BE HELD IN STRICT CONFIDENCE BY YOU. ALL RIGHTS TO ANY INVENTIONS, DESIGNS, TRADE MARKS, TRADE NAMES AND COPYRIGHTS DISCLOSED ARE RESERVED TO TICO TERMINAL SERVICES, INC.

TICO MANUFACTURING
66 CYPRESS RIDGE DR.
RIDGELAND, SC 29936
(843) 717-2226

TITLE: GLASS & WINDOWS

SIZE	DWG. NO.	REV
D	721798-C1	

SCALE: 1:16 | WEIGHT: 1345.40 | SHEET 1 OF 1

REV D 721798-C1

TICO PRO-SPOTTER				
CAB GLASS & WINDOWS, 2017-III CAB				721798
ITEM	**PART #**	**QTY/M**	**DESCRIPTION**	
	721798-C1	REF	CAB GLASS & WINDOWS, 2017-III CAB	
1	121369	1	GLASS-WINDSHIELD, FRT. 2017-III CAB	
2	90521-9	1	WEATHERSTRIPPING, SEAL	
3	90425	1	GLASS-REAR, 2017-III CAB	
4	90521-1	1	WEATHERSTRIPPING, SEAL	
5	920088	1	WINDOW-LH SIDE POWER WINDOW	
6	121368	1	GASKET, 2017 CAB POWER WINDOW	
7	121366	1	ASSEMBLY, 2017 CAB UPPER POWER WINDOW FRAME	
8	800439	9	SCREW, BUTTON HD SOCKET CAP W/FLG., #10-32 X 1" LG., SS	
NOT SHOWN	80232	2	WASHER, FLAT, SAE, #10, SS	
NOT SHOWN	800424	2	NUT, HEX, NYLOCK, #10-32, SS	
NOT SHOWN	920416	1	KIT, WINDOW / AC DRAIN	
9	122011	1	PANEL-POWER WINDOW, 2017-III CAB	
10	800440	8	SCREW, PHILLIPS OVAL HD #10 X 1/2" LG.	
11	800441	6	SCREW, PHILLIPS TRUSS HD, #10-32 X 3/4 LG., SS	
NOT SHOWN	91903	4	NUT, "S" STYLE, 10-32, ZINC	
NOT SHOWN	91903	4	NUT, "S" STYLE, 10-32, ZINC	
NOT SHOWN	620805	1	HARNESS- 2017 CAB, POWER WINDOW	
12	910366	1	SWITCH- ROCKER, POWER WINDOW CONTROL	
13	90946	1	BEZEL-SWITCH SINGLE	
14	122235	1	LH SIDE AUX. WINDOW EXTENDED, 2017-III	
15	920377	1	SEAL-RUBBER, LH SIDE AUX. WINDOW	
16	920089	1	WINDOW-RH SIDE SLIDE/WING, 2017-III CAB	
17	90521-8	1	WEATHERSTRIPPING, SEAL	
REV	**DATE**	**BY**		**SHEET**
C	11/6/2017	MAL		1 OF 1
TICO MANUFACTURING - RIDGELAND, SC 29936				