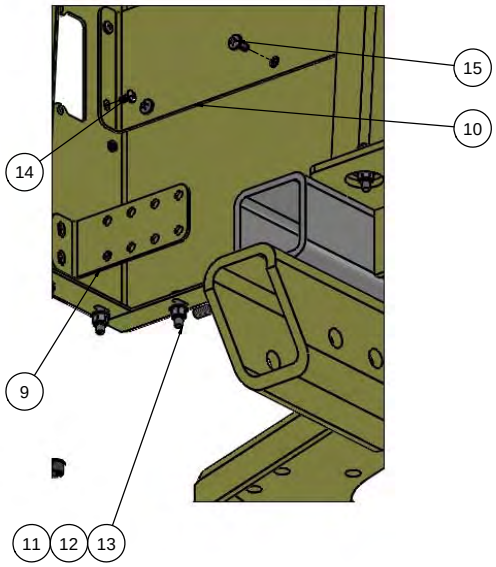

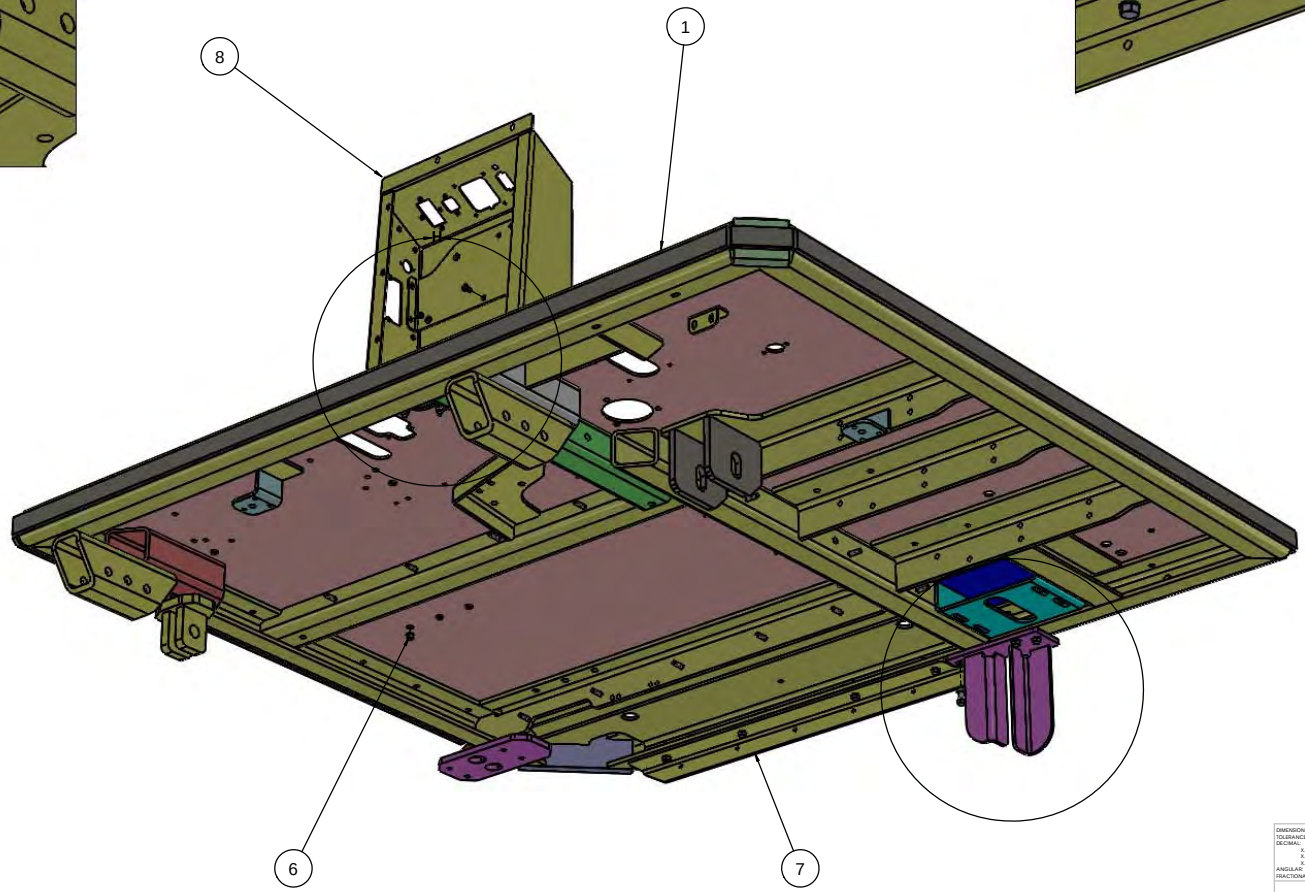

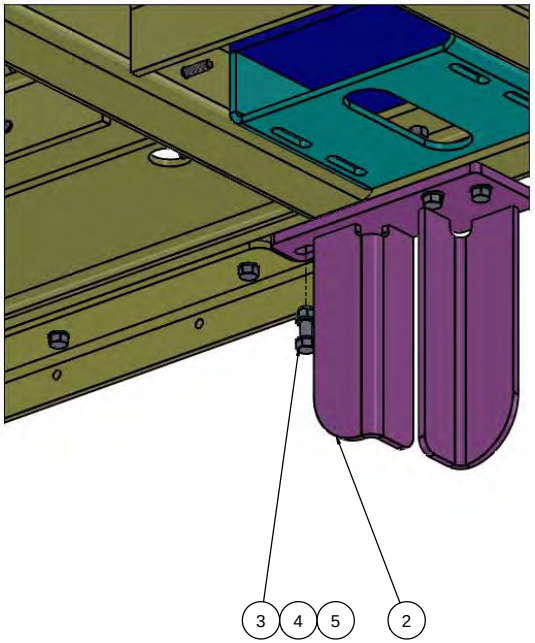

FLOOR ASSEMBLY
PAGE 1 PARTS DETAIL
PAGE 2 PARTS LIST

DIMENSIONS ARE IN INCHES TOLERANCES: DECIMAL: X.X ± 0.06 X.XX ± 0.03 X.XXX ± 0.005 ANGULAR: ± 0.5° FRACTIONAL ± 1/32"		NAME	DATE
	DRAWN	MAL	10/23/2017
	CHECKED		
	APPROVED		
	DO NOT SCALE DRAWING		
MATERIAL N/A	THE SUBJECT MATTER SHOWN AND DESCRIBED IN THE DRAWING AND ANY OTHER INFORMATION ADVANCED IN CONNECTION THEREWITH IS PROPRIETARY PROPERTY AND IS TO BE HELD IN STRICT CONFIDENCE BY YOU. ALL RIGHTS TO ANY INVENTIONS, DESIGNS, TRADE MARKS, TRADE NAMES AND COPYRIGHTS DISCLOSED ARE RESERVED TO TICO TERMINAL SERVICES, INC.		
FINISH SEE NOTE			
THICKNESS N/A			

TICO MANUFACTURING
66 CYPRESS RIDGE DR.
RIDGELAND, SC 29936
(843) 717-2226

TITLE: FLOOR ASSEMBLY

SIZE	DWG. NO.	REV
D	721779-D1	

SCALE: 1:12 | WEIGHT: 730.51 | SHEET 1 OF 1

D 721779-D1 REV

TICO PRO-SPOTTER				
FLOOR ASSEMBLY, 2017-III, NON ENGINE SPECIFIC, NON HEATER SPECIFIC, GALV				721779
ITEM	**PART #**	**QTY/M**	**DESCRIPTION**	
	721779-D1	REF	FLOOR ASSEMBLY, 2017-III	
1	122373	1	FLOOR ASSEMBLY, GALV, (2017-III)	
2	122266	1	ASSEMBLY, RAIL GUIDE, 2017-II, GALV	
3	82383	7	BOLT, 3/8-16 X 1-1/2" LG HEX GRD 8	
4	85091	14	WASHER, 3/8" HRDN	
5	85025	7	NUT, 3/8-16 NYLOK GRD 8	
6	910449	6	SNAP IN PLUG 1/2"DIA HOLE,BLACK	
7	121355	1	BRACKET, BAFFLE MOUNT	
8	122047	1	ASSEMBLY, CAB PDC BOX (2017-II)	
NOT SHOWN	91155	26"	SEAL-CLOSED CELL FOAM	
NOT SHOWN	910343	48"	BULB SEAL, CLOSED CELL FOAM W/HIGH STRENGTH TAPE	
9	122044	1	BRACKET, CABLE MANAGEMENT (2017-III)	
10	122054	1	BRACKET, ASS'Y, TCM & ABS (2017-II)	
11	82370	6	BOLT, HEX HD 1/4-20 x 1	
12	85089	12	WASHER, NARROW HARD 1/4	
13	85023	6	LOCK NUT, NYLOCK COARSE 1/4-20	
14	800413	4	SCREW, PAN HD M5 X 0.8 X 10MM LG, ZINC	
15	800444	3	SCREW, PH 1/4-20 x 1/2 Lg	
16	80187	6	SCREW, PAN HD 8-32 x 1/2 Lg	
REV	**DATE**	**BY**		**SHEET**
D	10/23/2017	MAL		1 OF 1
TICO MANUFACTURING - RIDGELAND, SC 29936				