REV.	DESCRIPTION	ECN	DATE	APPROVED
A	RELEASED	16295	6/21/2016	

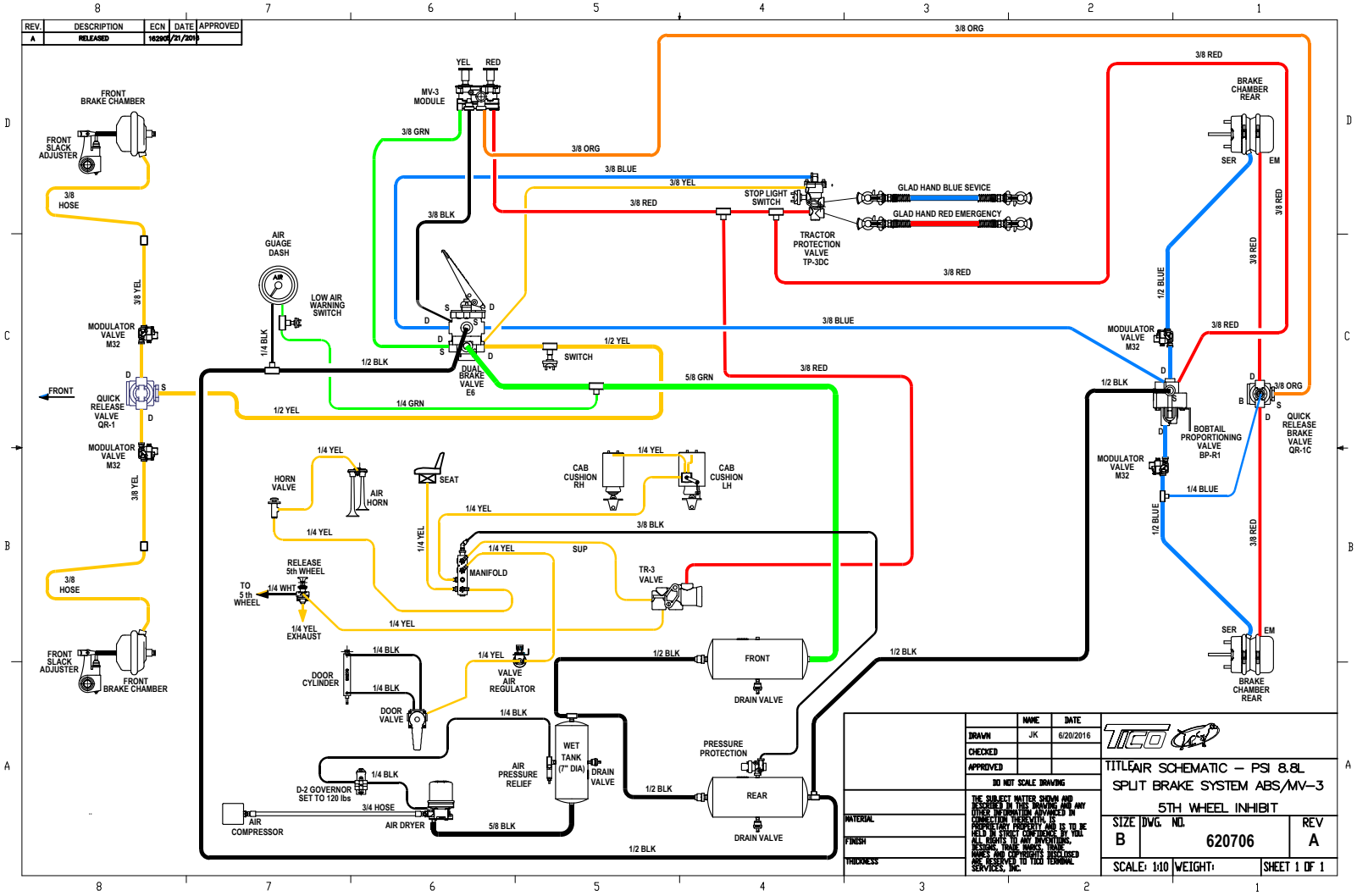

	NAME	DATE
DRAWN	JK	6/20/2016
CHECKED		
APPROVED		

DO NOT SCALE DRAWING

MATERIAL

FINISH

THICKNESS

THE SUBJECT MATTER SHOWN AND DESCRIBED IN THIS DRAWING AND ANY OTHER INFORMATION ADVANCED IN CONNECTION THEREWITH, IS PROPRIETARY PROPERTY AND IS TO BE HELD IN STRICT CONFIDENCE. BY YOU. ALL RIGHTS TO ANY INVENTIONS, DESIGNS, TRADE, BRAND, TRADE NAMES AND COPYRIGHTS DISCLOSED ARE RESERVED TO TICO TERMINAL SERVICES, INC.

TITLE: AIR SCHEMATIC – PSI 8.8L SPLIT BRAKE SYSTEM ABS/MV-3 5TH WHEEL INHIBIT

SIZE	DWG. NO.	REV
B	620706	A

SCALE: 1:10 | WEIGHT: | SHEET 1 OF 1